GIGAVAC®
ADVANCED SWITCHING SOLUTIONS

25kV SPDT HV Relay
Single Pole Double Throw

G25

FEATURES

- **Durable tungsten contacts with improve load switching capability****
- **Smallest 25kV EM relay available**
- **Mounting options in any axis**
- **Solder or convenient threaded HV connections**

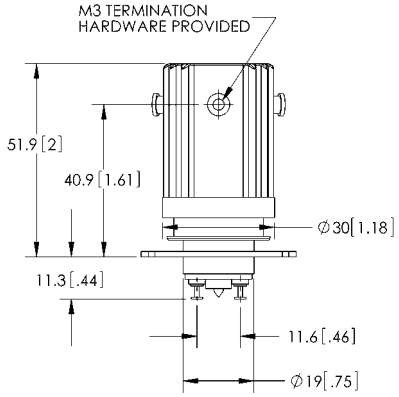

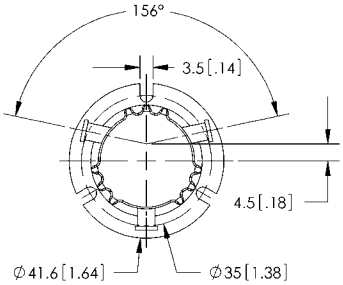

PRODUCT SPECIFICATIONS

Contact & Relay Ratings	Units	G25
Contact Form		C
Contact Arrangement		SPDT
Contact Material (moveable/stationary)		molybdenum /tungsten
Dielectric		Vacuum
Voltage, Test Max., Contacts & to Base (15 µA Leakage Max.) dc or 60Hz	kV Peak	27
Voltage, Operating Max., Contacts & to Base (15 µA Leakage Max.) dc or 60 Hz	kV Peak	25
Current, Load Switching		Contact factory**
Current, Continuous Carry Max dc or 60 Hz	Amps	18
Coil Hi-Pot (V RMS, 60 Hz)	V	500
Resistance, Contact Max @ 1A, 28 Vdc	ohms	0.1
Operate Time	ms	15
Release Time	ms	15
Life, Mechanical	cycles	1 million
Weight, Nominal	g (oz)	120 (4)
Vibration, Operating, Sine (55-500 Hz Peak)	G's	10
Shock, Operating, 1/2 Sine11ms (Peak)	G's	20
Temperature Ambient Operating	°C	-55 to +125

COIL RATINGS

Nominal, Volts dc	12	26.5	115
Pick-up, Volts dc, Max.	9	18	90
Drop-Out, Volts dc	.5 - 5	1 - 10	5 - 55
Coil Resistance (Ohms ±10%)	30	125	2000

PART NUMBER SYSTEM

G25	S	P	
High Voltage/ Power Terminal Connections	**S** = Solder Pot **W** = Screw, M3		
Mounting		**P** = Through Panel **F** = Flange	
Coil Voltage*			**Blank** = 26.5 Vdc **-12Vdc** = 12Vdc **-115Vdc** = 115Vdc

* Order the relay with the coil voltage in the part number as shown above. The coil voltage will appear on the coil plate near the coil terminals rather than in the P/N on the relay.

** Consult factory for load switching applications.

GIGAVAC® - 6382 Rose Lane - Carpinteria, CA 93013 - ph +1-805-684-8401 - fax +1-805-684-8402
info@gigavac.com - www.gigavac.com - ©Copyright 2003-2015 GIGAVAC, LLC.